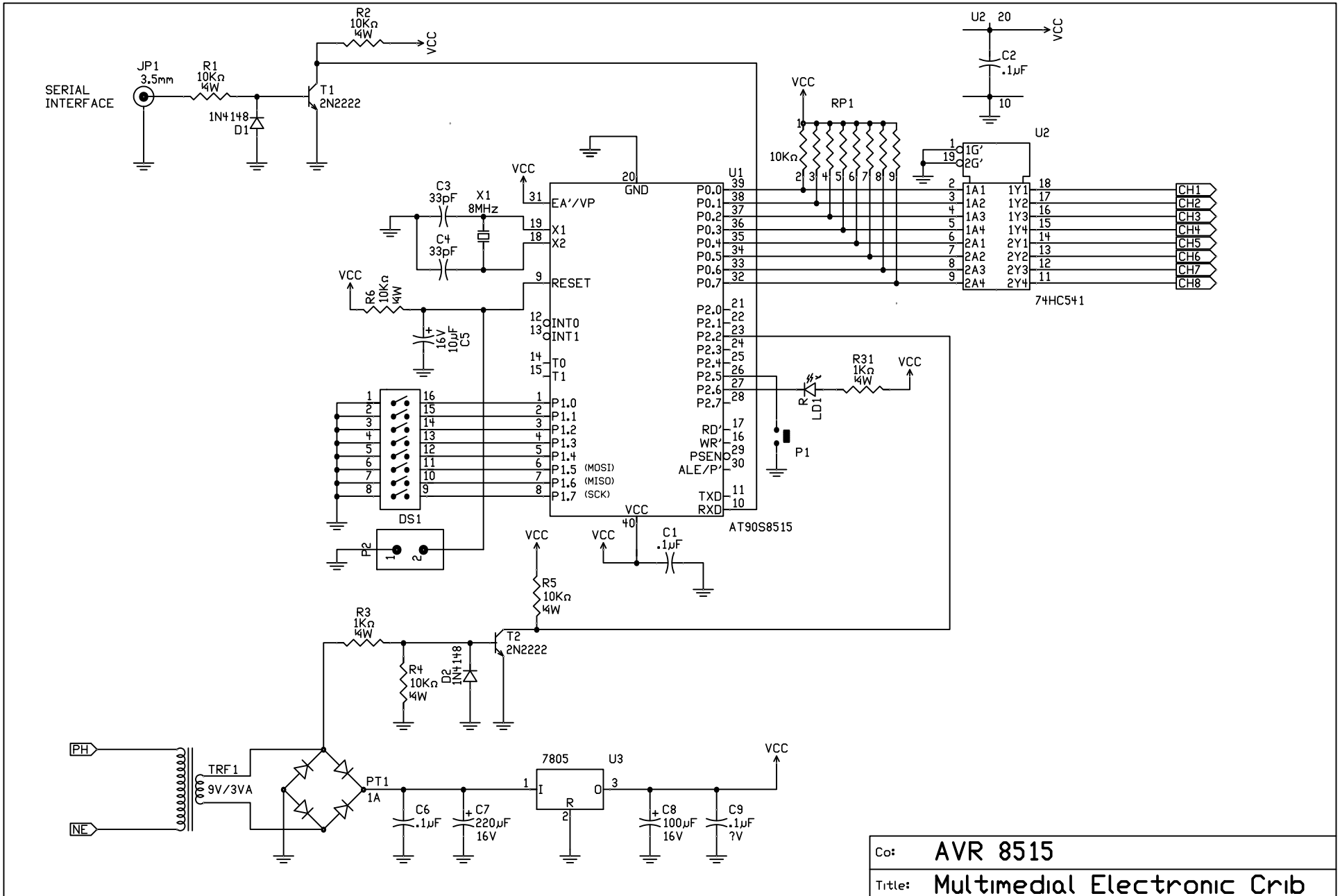

Co:	AVR 8515		
Title:	Multimedial Electronic Crib		
Board:	Lights Controller	Revision:	B
Author:	Sergio Salvitti	Size:	A
Date:	31th May 2002	Sheet	1 of 2